THREE PHASE INDUCTION MOTOR

TEFC

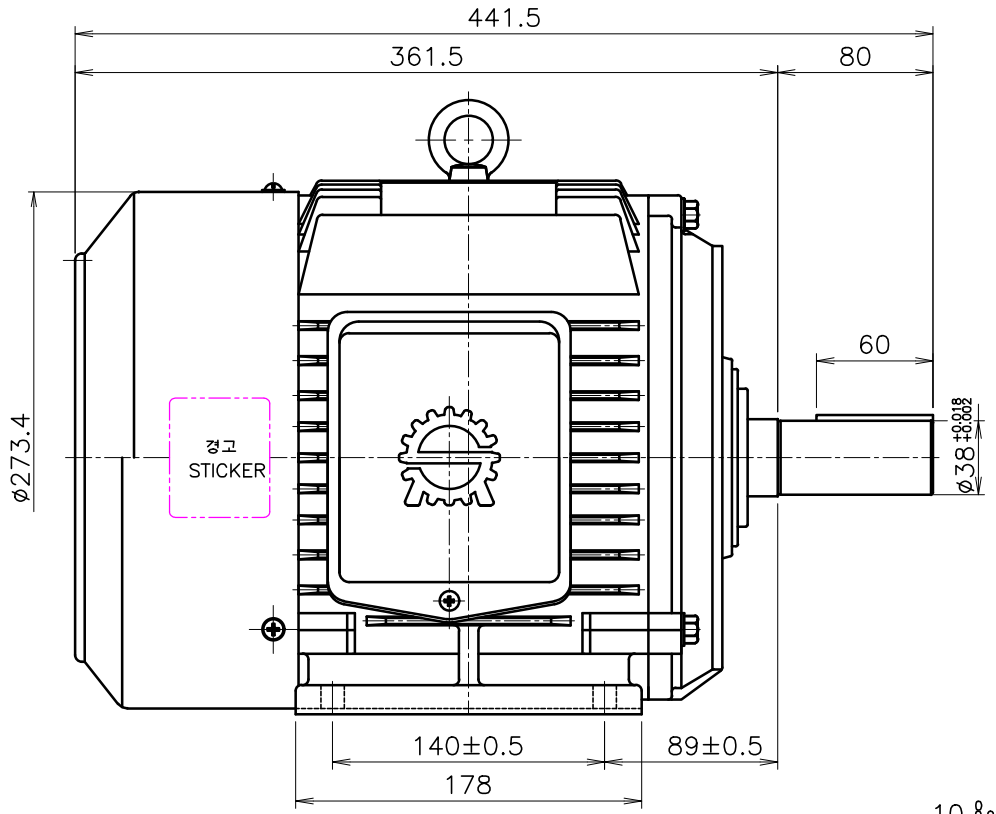

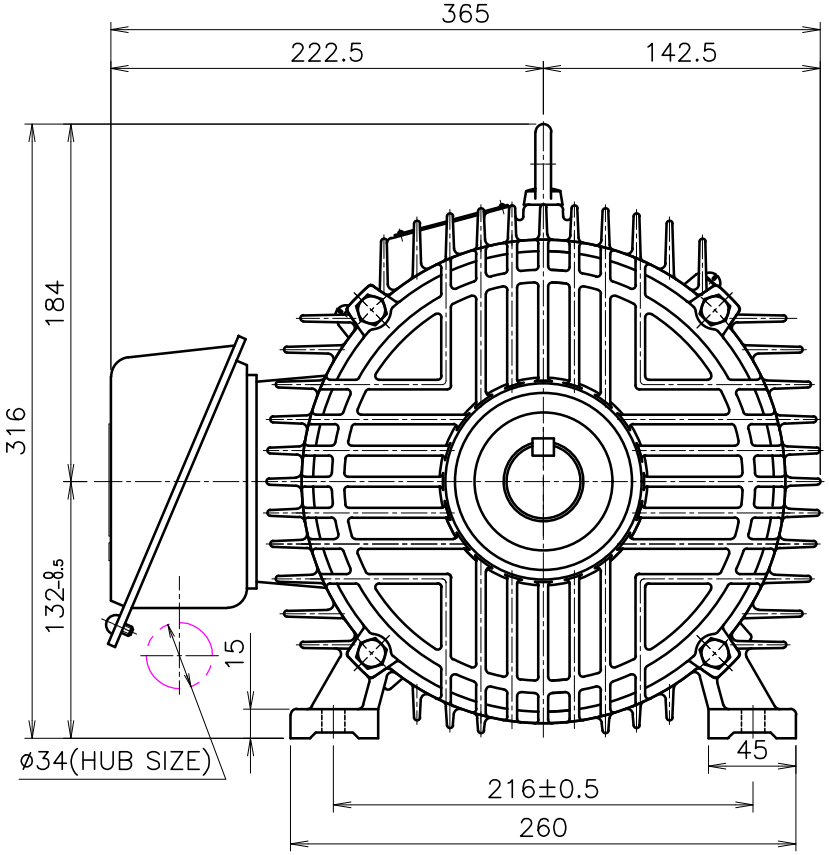

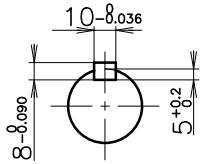

FRAME NO.	OUTPUT (kW)	POLES	VOLTS	Hz	INS. CLASS	PRO-TEC-TION	RA-TING	BEARING NO. 2P DRIVE	2P OPP.D.	4P DRIVE	4P OPP.D.	6P/8P DRIVE	6P/8P OPP.D.	APPROX WEIGHT(kg) 2P	4P	6P/8P
132S	5.5/7.5	2	–	–	B	IP44	CONT	6308 zz	6306 zz	6308 zz	6306 zz	6308 zz	6306 zz	–	–	–
	5.5	4														
	3.7	6														

APPD BY	IL HWAN KIM	UNIT	mm
CHKD BY	KEOAK HOON	SCALE	N/S
DSND BY	LEE EUN HWA	PROJEC'N	3rd Angle
DATE	2019.05.13	PAGE	

SHINMYUNG ELECTRIC CO.,LTD

SUBJECT

Revision No. 0

TITLE

OUT LINE

REF. NO

DWG NO TFC1320407B03N