THREE PHASE INDUCTION MOTOR

TEFC

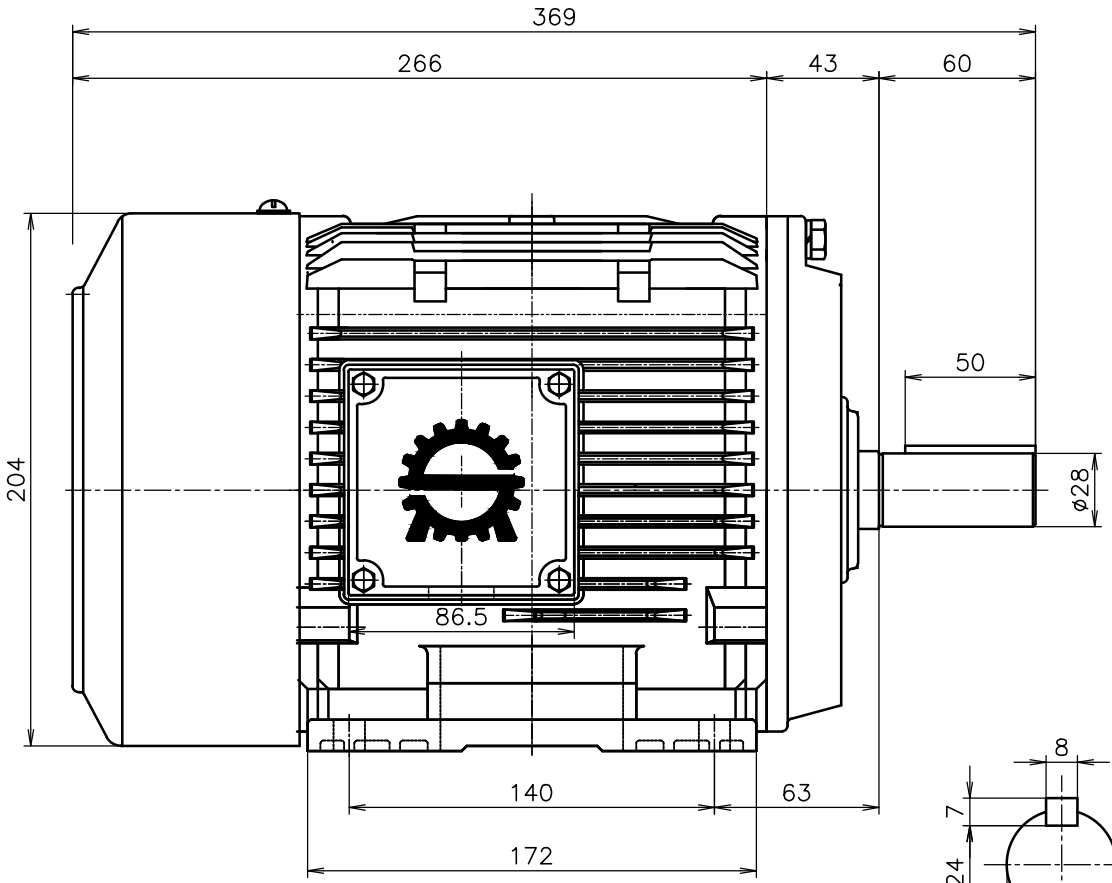

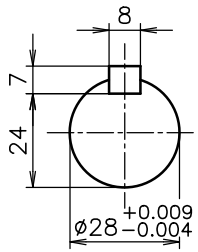

OUTPUT SHAFT

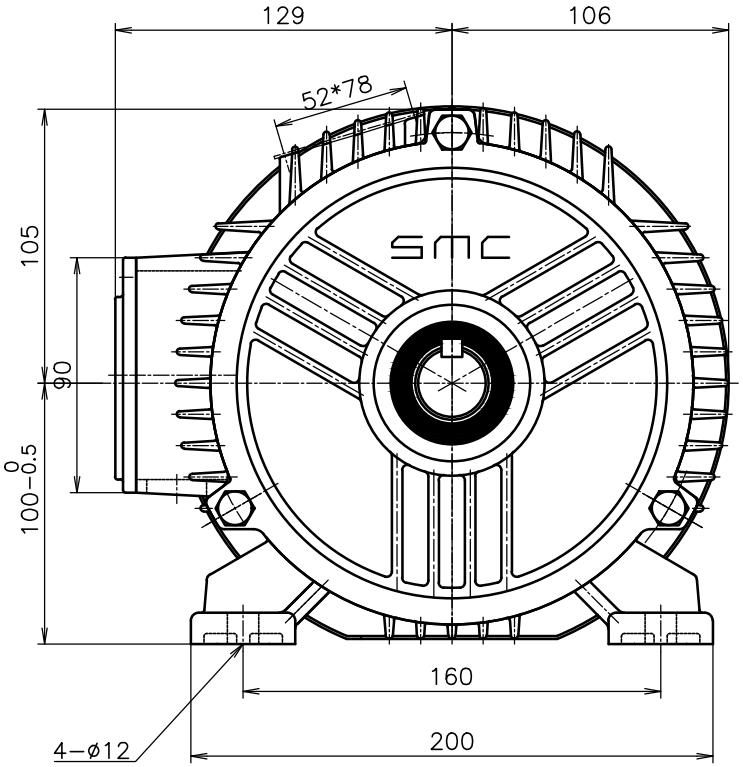

FRAME NO.	OUTPUT(kW) 2P	4P	6P	8P	VOLTS	Hz	INS. CLASS	PRO-TEC-TION	RA-TING	BEARING NO. 2P DRIVE	2P OPP.D.	4P DRIVE	4P OPP.D.	6P DRIVE	6P OPP.D.	APPROX WEIGHT(kg) 2P	4P	6P
100L	–	2.2	–	–	–	–	B	IP44	CONT	–	–	6206 zz	6205 zz	–	–	–	–	–

APPD BY	KIM HOON SIK	UNIT	mm
CHKD BY	CS LEE	SCALE	N/S
DSND BY	YS MOON	PROJEC'N	3rd Angle
DATE	2023.11.08	PAGE	

SHINMYUNG ELECTRIC CO.,LTD

SUBJECT	–	Revision No.	0
TITLE	OUT LINE		
REF. NO	HORIZONTAL TYPE		
DWG NO	TFC022HB3N18A01		