THREE PHASE INDUCTION MOTOR

TEFC

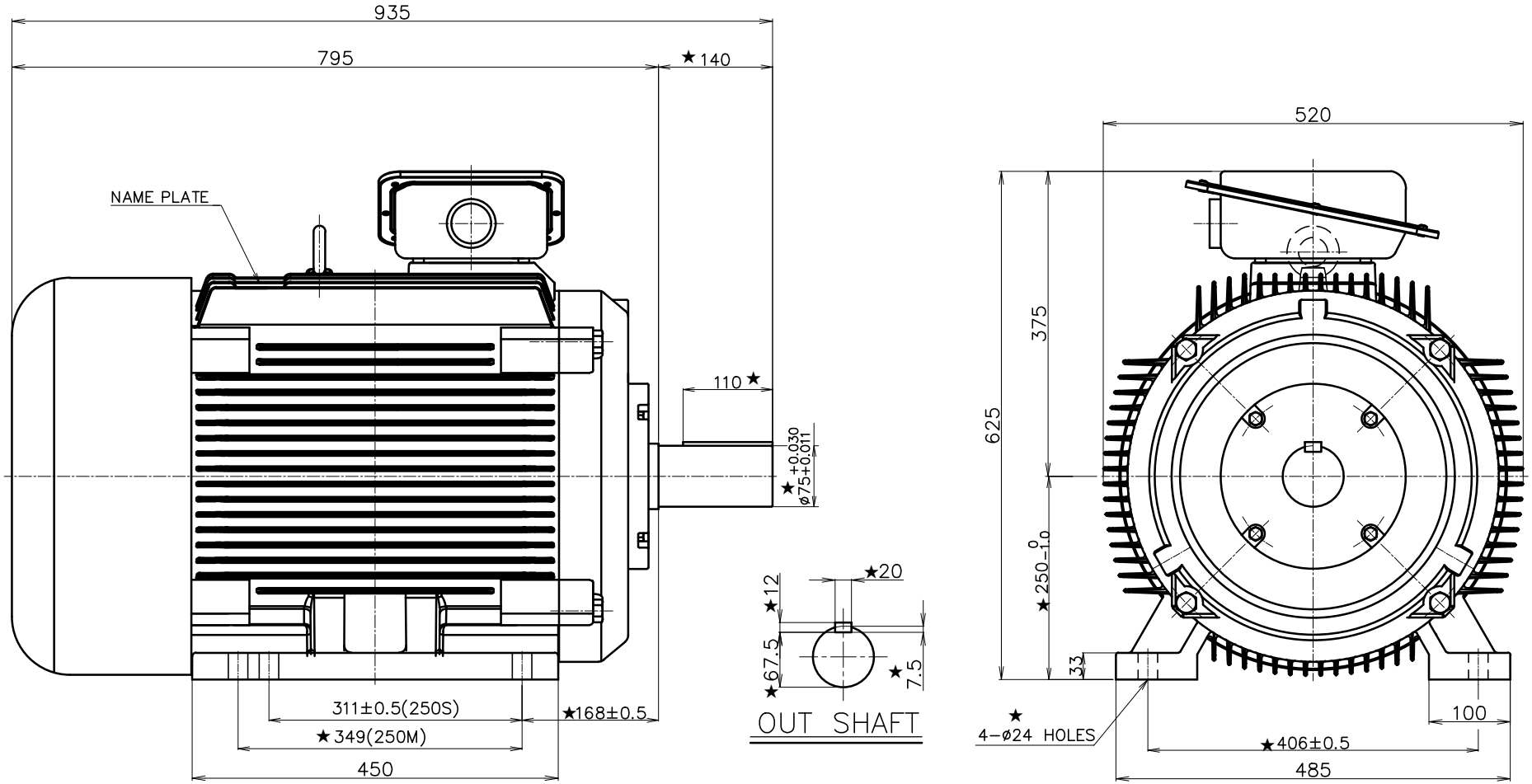

NOTE:

1) 키 및 키홈 공차: KS B 1311
2) ★표 이외의 치수는 APPROX 치수임.

FRAME NO.	OUTPUT (kW)	POLES	VOLTS	Hz	INS. CLASS	PRO-TEC-TION	RA-TING	BEARING NO. 2P DRIVE	BEARING NO. 2P OPP.D.	BEARING NO. 4P DRIVE	BEARING NO. 4P OPP.D.	BEARING NO. 6P/8P DRIVE	BEARING NO. 6P/8P OPP.D.	APPROX WEIGHT(kg) 2P	APPROX WEIGHT(kg) 4P	APPROX WEIGHT(kg) 6P/8P
250M	90	4P	–	–	F	IP55	CONT	–	–	6316 zz	6314 zz	6316 zz	6314 zz	–	–	–
	75	6P														
	45	8P														

APPD BY	IL HWAN KIM	UNIT	mm
CHKD BY	IL HWAN KIM	SCALE	N/S
DSND BY	LEE EUN HWA	PROJEC'N	3rd Angle
DATE	2020.03.17	PAGE	

SHINMYUNG ELECTRIC CO.,LTD

SUBJECT | Revision No. 0

TITLE: OUT LINE

REF. NO: HORIZONTAL TYPE

DWG NO: TFC2500404B03N