TYPE	EP2 (Efficiency & Power 2)														Approx Weight (kg)
GEAR RATIO	1/5	1/10	1/15	1/20	1/30	1/40	1/50	1/60	1/75	1/80	1/90	1/100			
RPM	360	180	120	90	60	45	36	30	24	22.5	20	18			

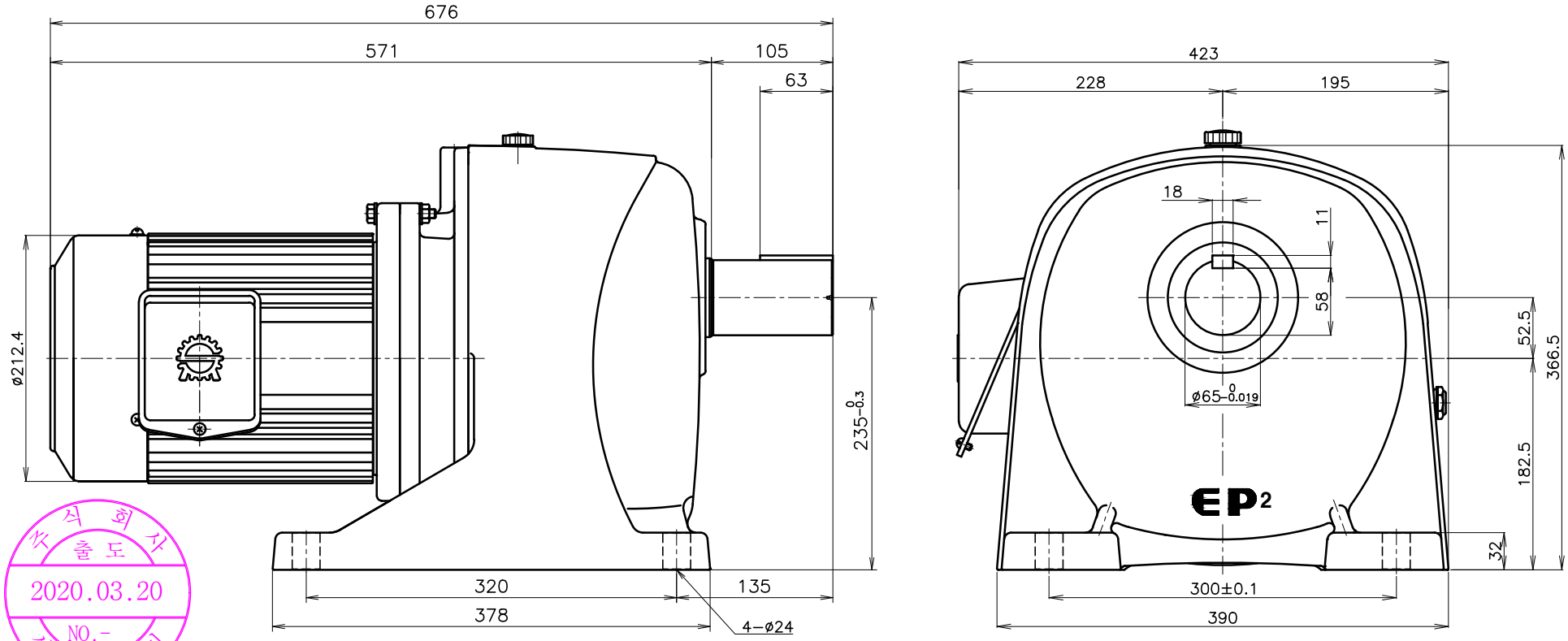

주식회사 출도 2020.03.20 NO.- 신명전기

감속기 형번 (출력축)	THREE PHASE INDUCTION MOTOR SPEC									
	PH	P	kW	VOLTS	Hz	BEARING NO.	기동방식	절연종류	PRO-TEC-TION	RA-TING
65	3	4	3.7	220/380	60	6308/6205	직입기동	B 종	IP44	CONT.

APPD BY	IL HWAN KIM	UNIT	mm
CHKD BY	IL HWAN KIM	SCALE	N/S
DSND BY	LEE EUN HWA	PROJEC'N	3rd Angle
DATE	2020.03.20	PAGE	

SMC SHINMYUNG ELECTRIC CO.,LTD

SUBJECT	EP2	Revision No.	0
TITLE	OUT LINE		
REF. NO	RATIO 1/5~1/100		
DWG NO	H0650100T037A02N		