TYPE	EP2 (Efficiency & Power Two)														Approx Weight (kg)
GEAR RATIO	1/5	1/10	1/15	1/20	1/30	1/40	1/50	1/60	1/75	1/80	1/90	1/100			
RPM	360	180	120	90	60	45	36	30	24	22.5	20	18			–

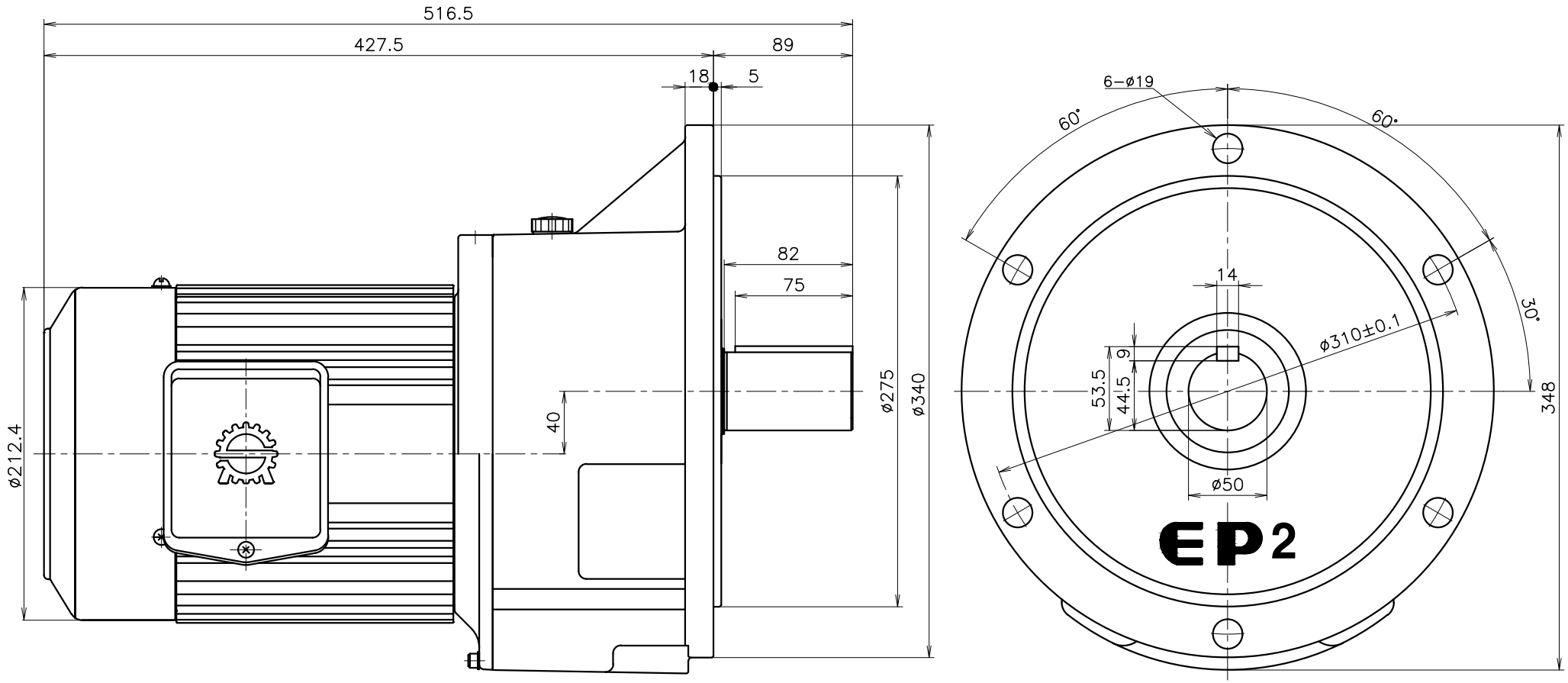

감속기 형번 (출력축)	THREE PHASE INDUCTION MOTOR SPEC									
	PH	P	kW	VOLTS	Hz	BEARING NO.	기동방식	절연종류	PRO-TEC-TION	RA-TING
50	3	4	2.2	–	–	6306/6205	직입기동	B 종	IP44	CONT.

APPD BY	IL HWAN KIM	UNIT	mm	SUBJECT	EP2
CHKD BY	KEOAK HOON	SCALE	N/S	Revision No.	0
DSND BY	LEE EUN HWA	PROJEC'N	3rd Angle	TITLE	OUT LINE
DATE	2017.09.26	PAGE		REF. NO	RATIO 1/5~1/100
SMC SHINMYUNG ELECTRIC CO.,LTD				DWG NO	F0500100T022A02N