THREE PHASE INDUCTION MOTOR

TEFC

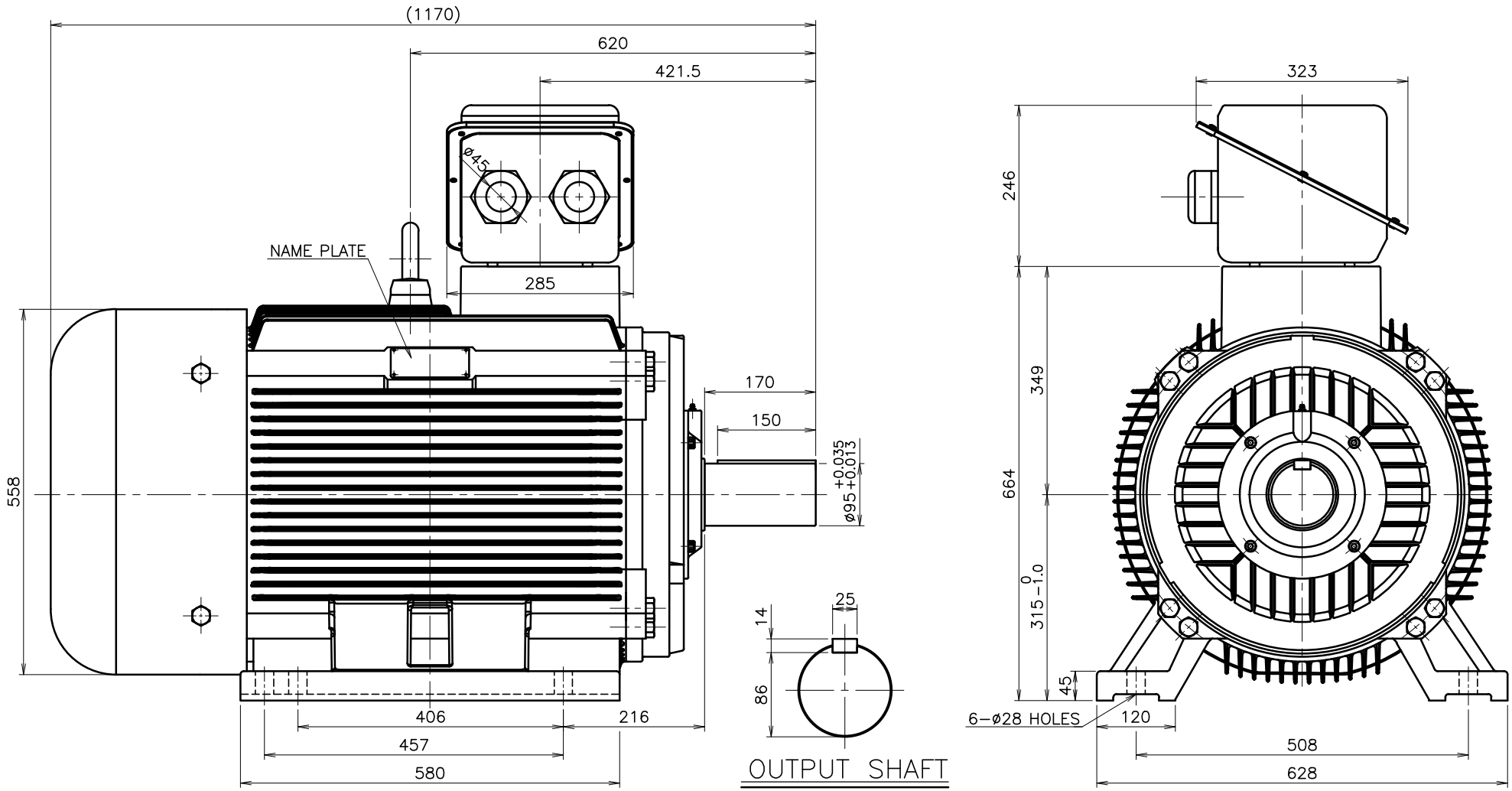

FRAME NO.	OUTPUT (kW)	POLES	VOLTS	Hz	INS. CLASS	PRO-TEC-TION	RA-TING	BEARING NO. 2P DRIVE	BEARING NO. 2P OPP.D.	BEARING NO. 4P DRIVE	BEARING NO. 4P OPP.D.	BEARING NO. 6P/8P DRIVE	BEARING NO. 6P/8P OPP.D.	APPROX WEIGHT(kg) 2P	APPROX WEIGHT(kg) 4P	APPROX WEIGHT(kg) 6P/8P
315	150	4	–	–	F	IP55	CONT	–	–	6321 zz	6319 zz	–	–	–	–	–

APPD BY	IL HWAN KIM	UNIT	mm
CHKD BY	IL HWAN KIM	SCALE	N/S
DSND BY	KEOAK HOON	PROJEC'N	3rd Angle
DATE	2019.01.18	PAGE	

SHINMYUNG ELECTRIC CO.,LTD

SUBJECT | Revision No. 0

TITLE: OUT LINE

REF. NO: HORIZONTAL TYPE

DWG NO: TFC3150401B03N