THREE PHASE INDUCTION MOTOR

TEFC

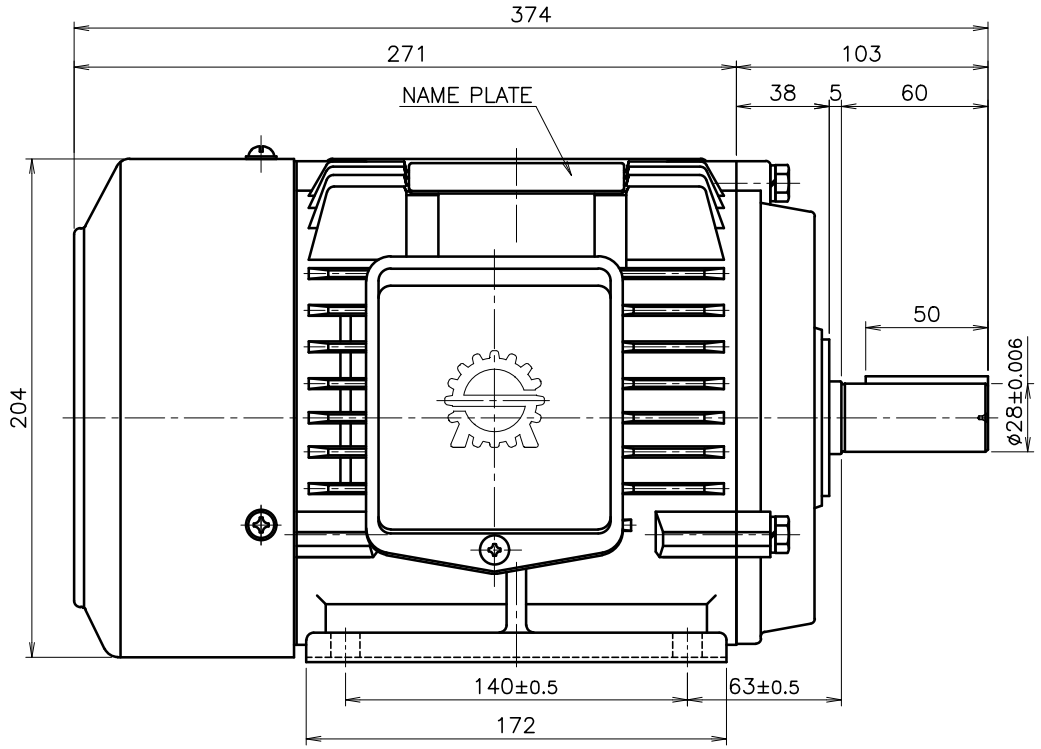

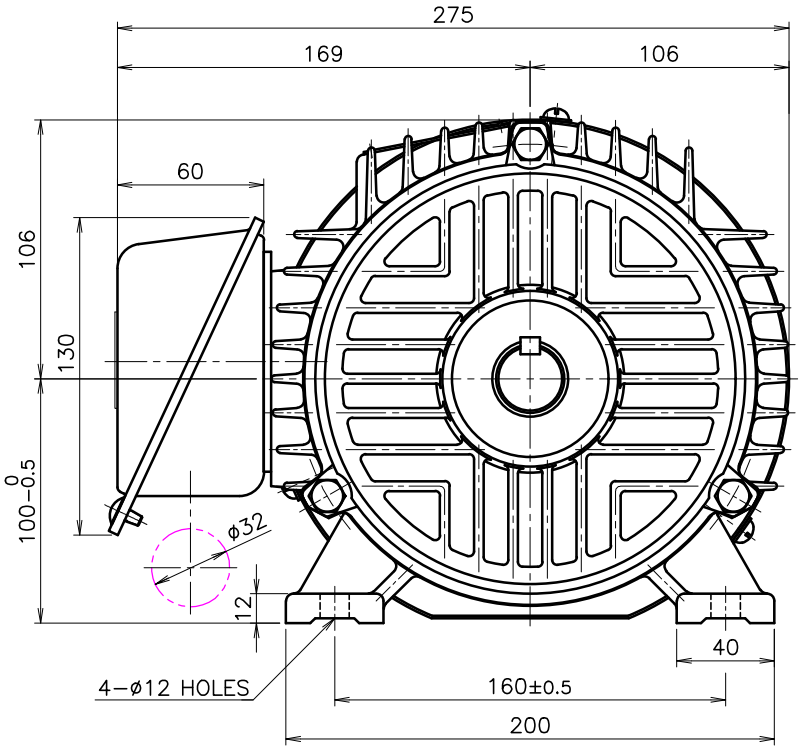

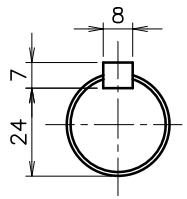

OUTPUT SHAFT

NOTE

1) 기성 고효율

FRAME NO.	OUTPUT (kW)	POLES	VOLTS	Hz	INS. CLASS	PRO-TEC-TION	RA-TING	BEARING NO. 2P DRIVE	2P OPP.D.	4P DRIVE	4P OPP.D.	6P/8P DRIVE	6P/8P OPP.D.	APPROX WEIGHT(kg) 2P	4P	6P/8P
100L	2.2	4	–	–	B	IP44	CONT	–	–	6206 zz	6205 zz	6206 zz	6205 zz	–	–	–
	1.5	6														

APPD BY	IL HWAN KIM	UNIT	mm
CHKD BY	IL HWAN KIM	SCALE	N/S
DSND BY	KEOAK HOON	PROJEC'N	3rd Angle
DATE	2019.03.11	PAGE	

SHINMYUNG ELECTRIC CO.,LTD

SUBJECT: – Revision No. 0

TITLE: OUT LINE 3PH−4P−2.2kW

REF. NO:

DWG NO: TFC1000402B03N