THREE PHASE INDUCTION MOTOR

TEFC

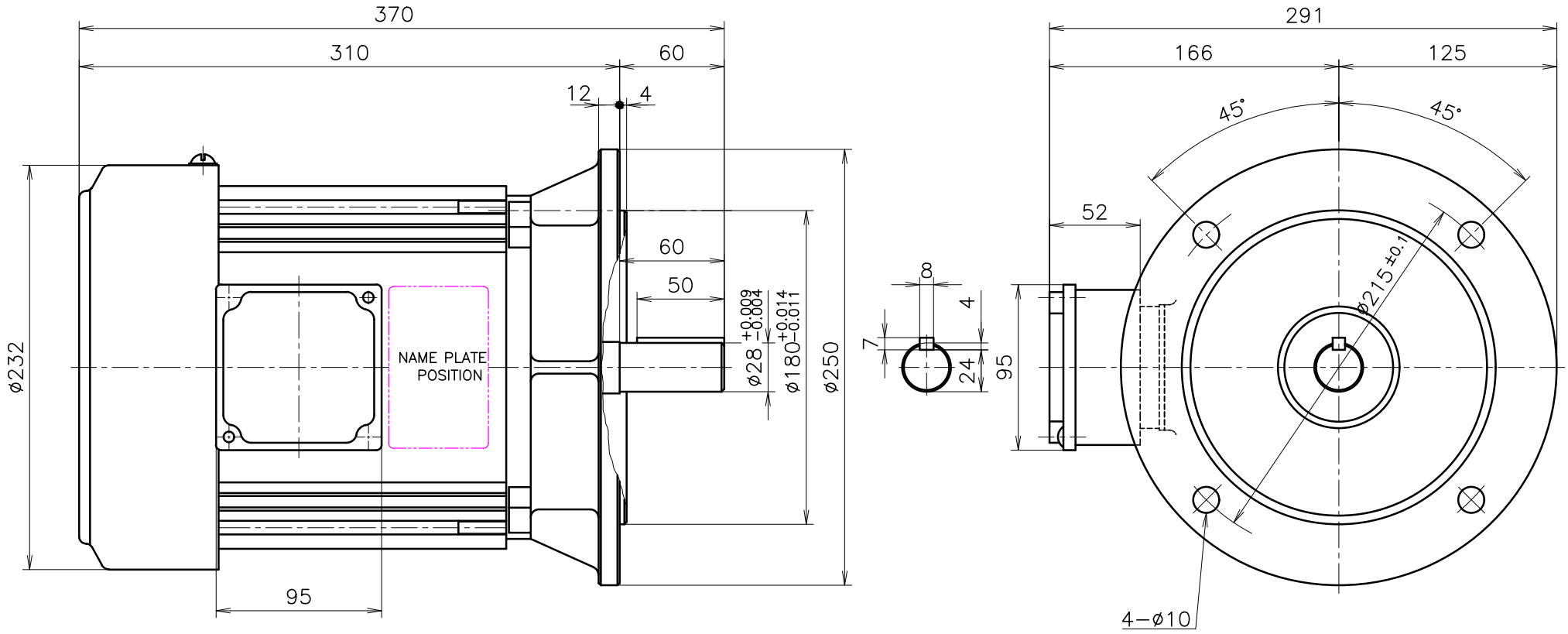

FRAME NO.	OUTPUT(kW) 2P	4P	6P	8P	VOLTS	Hz	INS. CLASS	PRO-TEC-TION	RA-TING	BEARING NO. 2P DRIVE	2P OPP.D.	4P DRIVE	4P OPP.D.	6P DRIVE	6P OPP.D.	APPROX WEIGHT(kg) 2P	4P	6P
FF215	3.7	2.2	1.5	–	220/380	60	B	IP44	CONT	6206 zz	6205 zz	6206 zz	6205 zz	6206 zz	6205 zz	37	37	37

APPD BY	KIM HOONSIK	UNIT	mm
CHKD BY	CS LEE	SCALE	N/S
DSND BY	LEE EUN HWA	PROJEC'N	3rd Angle
DATE	2022.08.11	PAGE	

SHINMYUNG ELECTRIC CO.,LTD

SUBJECT	–	Revision No.	0
TITLE	OUT LINE		
REF. NO	IEC TYPE		
DWG NO	TFC0900401B05		