THREE PHASE INDUCTION MOTOR

TEFC

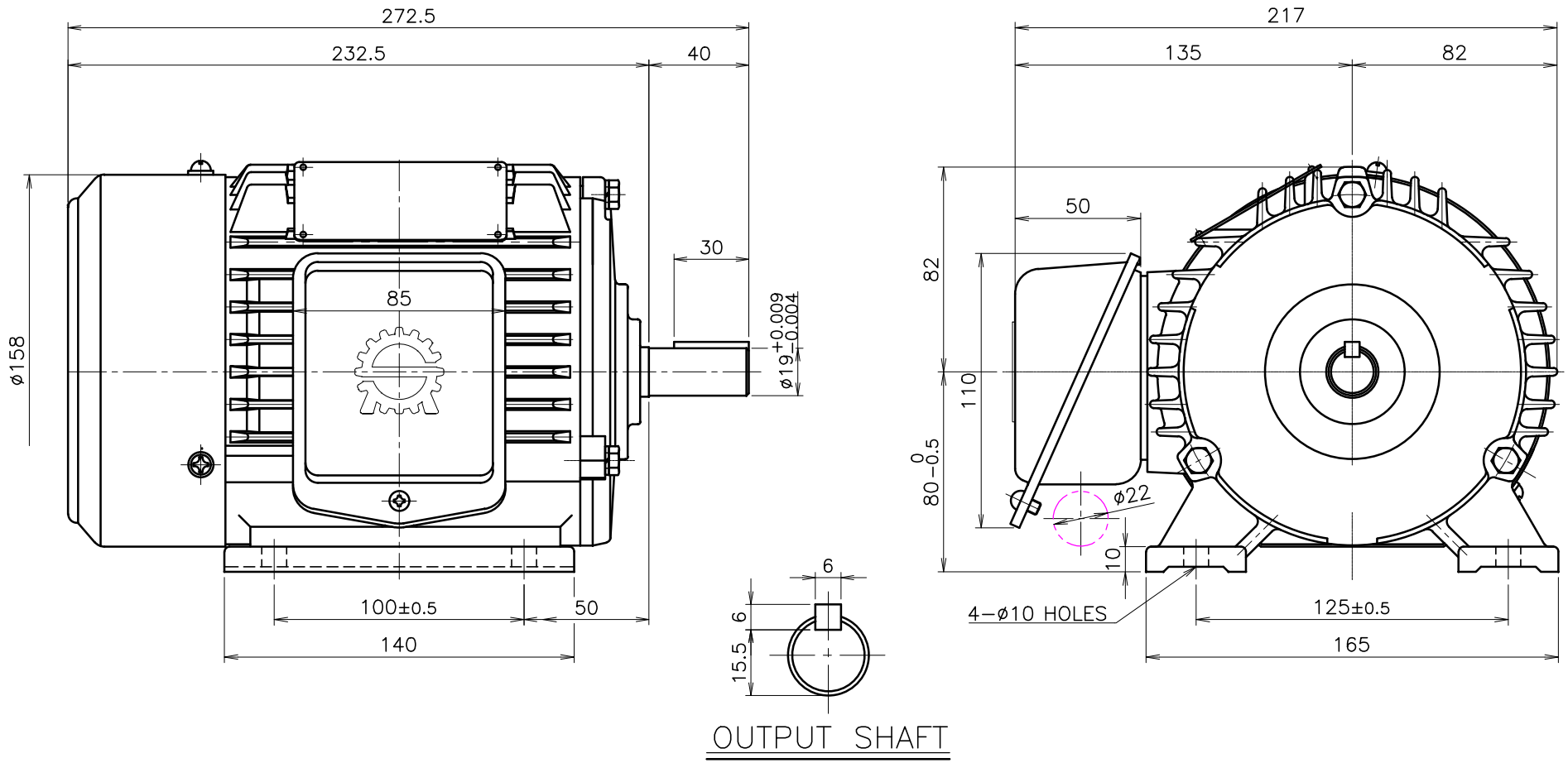

FRAME NO.	OUTPUT (kW)	POLES	VOLTS	Hz	INS. CLASS	PRO-TEC-TION	RA-TING	BEARING NO. 2P DRIVE	2P OPP.D.	4P DRIVE	4P OPP.D.	6P/8P DRIVE	6P/8P OPP.D.	APPROX WEIGHT(kg) 2P	4P	6P/8P
80M	0.75	2	–	–	B	IP44	CONT	6204 zz	6203 zz	6204 zz	6203 zz	6204 zz	6203 zz	–	–	–
	0.75	4														
	0.4	6														

APPD BY	IL HWAN KIM	UNIT	mm
CHKD BY	IL HWAN KIM	SCALE	N/S
DSND BY	LEE EUN HWA	PROJEC'N	3rd Angle
DATE	2021.05.07	PAGE	

SHINMYUNG ELECTRIC CO.,LTD

SUBJECT: – Revision No. 0

TITLE: LAY OUT

REF. NO:

DWG NO: TFC0800401B03N