THREE PHASE INDUCTION MOTOR

TEFC

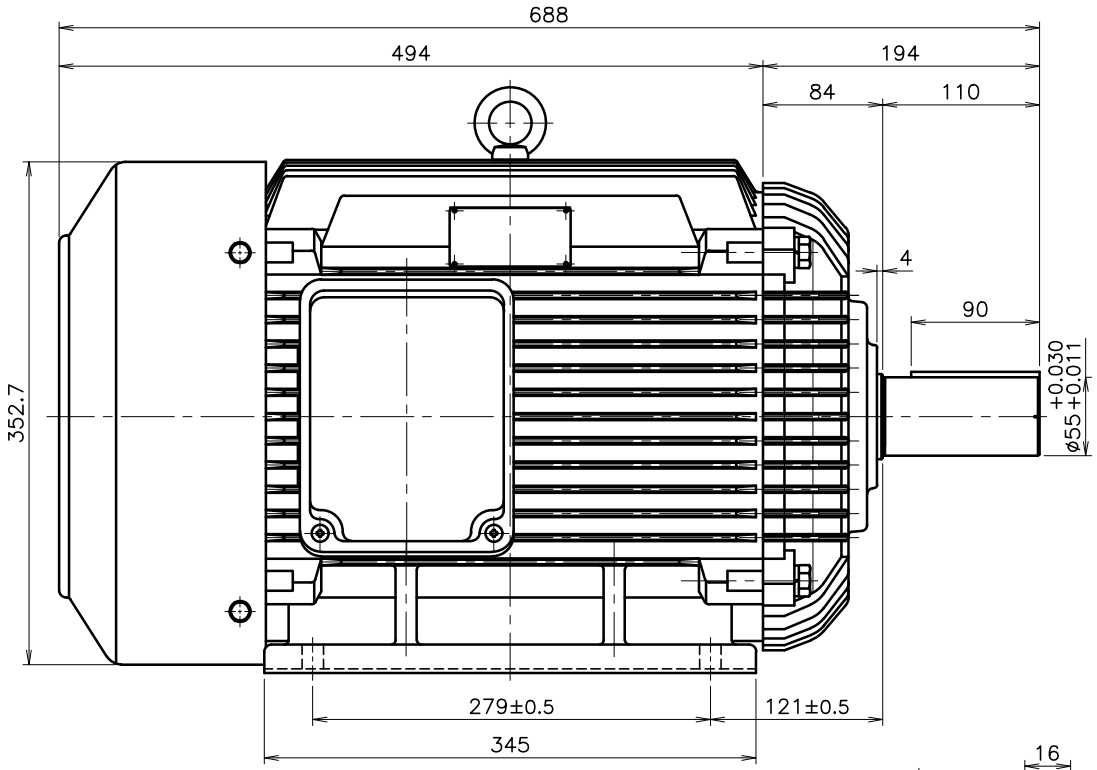

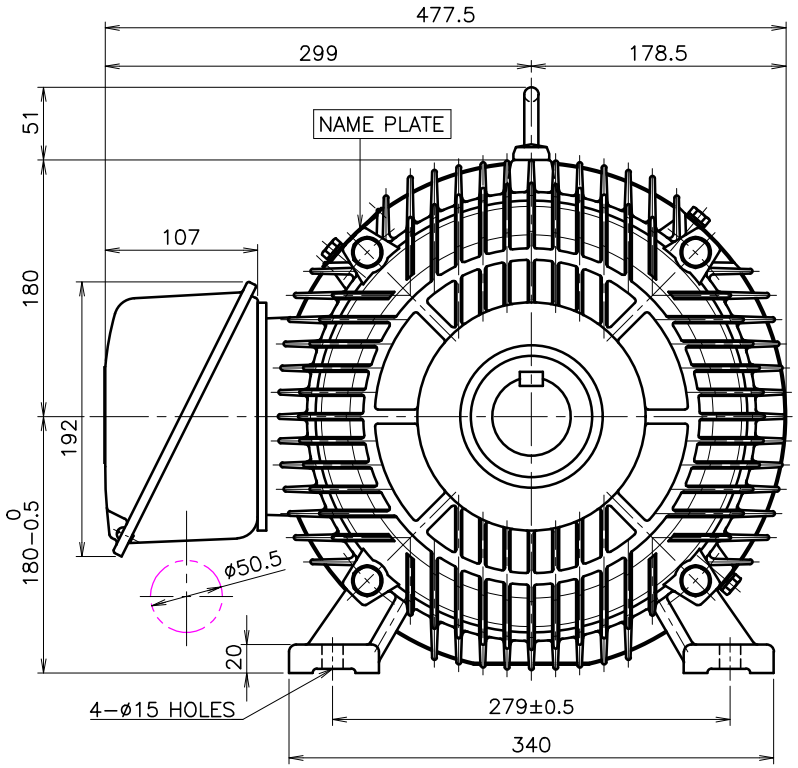

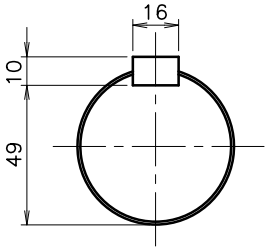

OUTPUT SHAFT

FRAME NO.	OUTPUT(kW)				VOLTS	Hz	INS. CLASS	PRO-TEC-TION	RA-TING	BEARING NO.						APPROX WEIGHT(kg)		
										2P		4P		6P				
	2P	4P	6P	8P						DRIVE	OPP.D.	DRIVE	OPP.D.	DRIVE	OPP.D.	2P	4P	6P/8P
180L	30	30	18.5/22	–	360	60	F	IP55	CONT	6312 zz	6309 zz	6312 zz	6309 zz	6312 zz	6309 zz	–	–	–

APPD BY		UNIT	mm
CHKD BY		SCALE	N/S
DSND BY	LEE EUN HWA	PROJEC'N	3rd Angle
DATE	2021.03.24	PAGE	

SHINMYUNG ELECTRIC CO.,LTD

SUBJECT | Revision No. 1

TITLE: OUT LINE

REF. NO: HORIZONTAL TYPE

DWG NO: TFC1800406B03