TYPE	EP+ (Efficiency & Power Plus)														Approx Weight (kg)
GEAR RATIO	1/5	1/10	1/15	1/20	1/30	1/40	1/50	1/60	1/75	1/80	1/90	1/100			
RPM	360	180	120	90	60	45	36	30	24	22.5	20	18			10.5

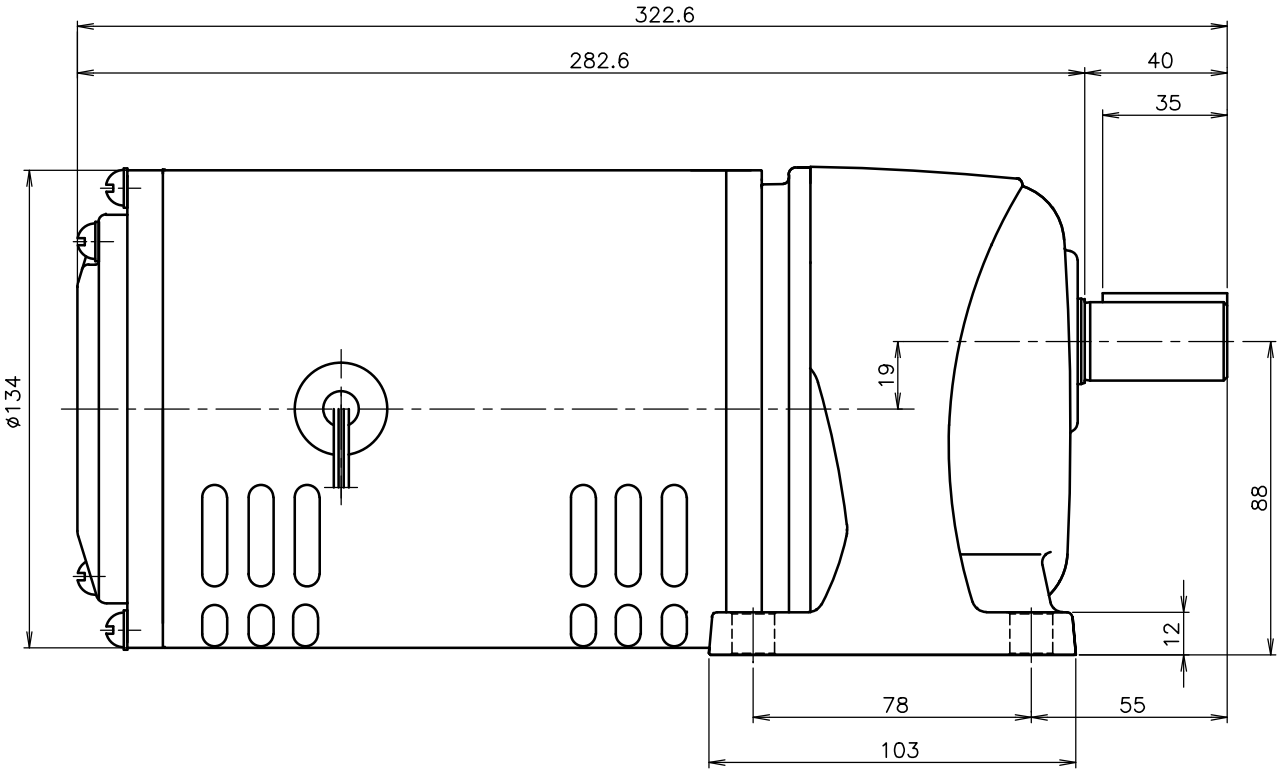

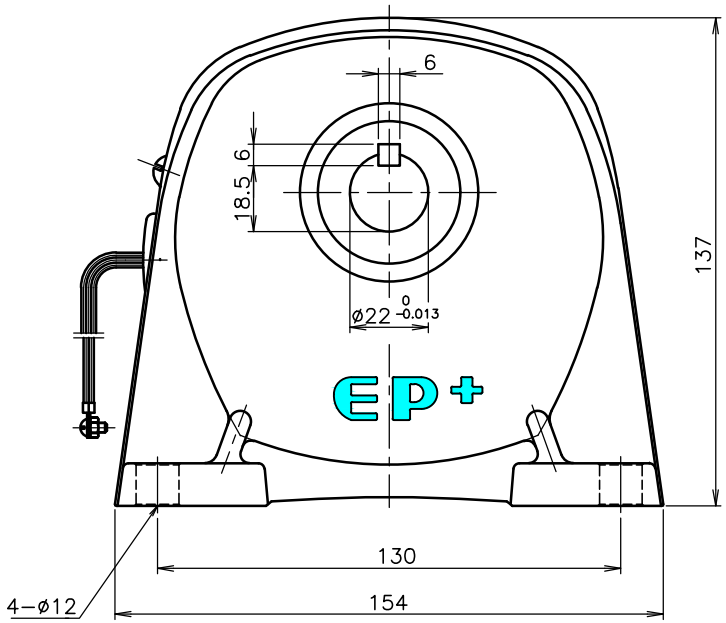

감속기 형번 (출력축)	SINGLE PHASE INDUCTION MOTOR SPEC									
	PH	P	kW	VOLTS	Hz	BEARING NO.	기동방식	절연종류	PRO-TEC-TION	RA-TING
22	1	4	0.2	–	–	6202/6202	분상기동형	B 종	IP44	CONT.

APPD BY	HS KIM	UNIT	mm
CHKD BY	CS LEE	SCALE	N/S
DSND BY	LEE EUN HWA	PROJEC'N	3rd Angle
DATE	2024.04.26	PAGE	

SMC SHINMYUNG ELECTRIC CO.,LTD

SUBJECT	EP+	Revision No.	1
TITLE	OUT LINE		
REF. NO	RATIO 1/5~1/100		
DWG NO	H0220100S002A01		