TYPE	SMG														Approx Weight (kg)
GEAR RATIO	1/5	1/10	1/15	1/20	1/30	1/40	1/50	1/60	1/75	1/80	1/90	1/100	–	–	
RPM	360	180	120	90	60	45	36	30	24	22.5	20	18	–	–	

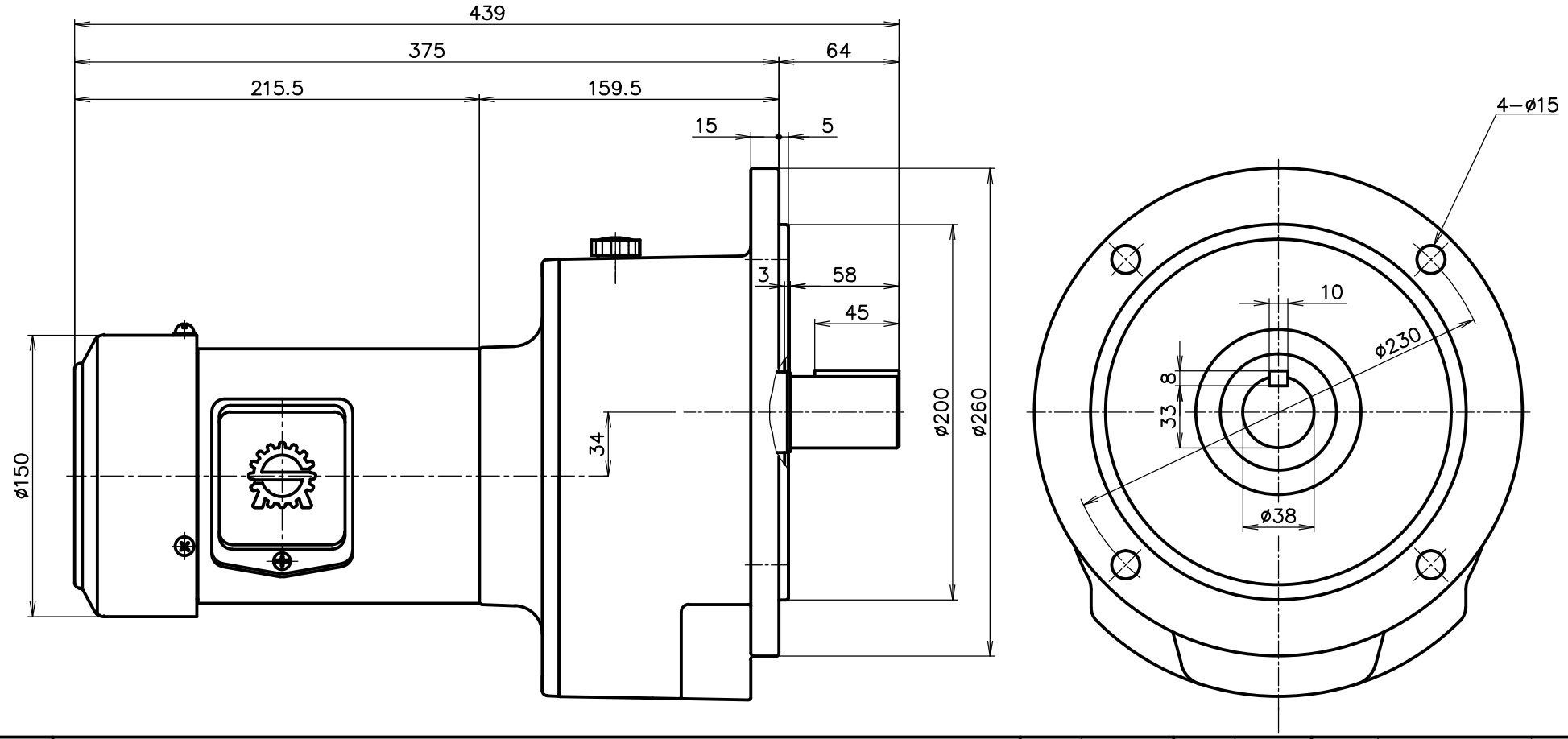

감속기 형번 (출력측)	THREE PHASE INDUCTION MOTOR SPEC									
	PH	P	kW	VOLTS	Hz	BEARING NO.	기동방식	절연종류	PRO–TEC–TION	RA–TING
38	3	4	0.75	220/380	60	6306/6203	직입기동	B 종	IP44	CONT.

APPD BY	IL HWAN KIM	UNIT	mm
CHKD BY	KEOAK HOON	SCALE	N/S
DSND BY	LEE EUN HWA	PROJEC'N	3rd Angle
DATE	2015.03.02	PAGE	

SHINMYUNG ELECTRIC CO.,LTD

SUBJECT	SMG	Revision No.	0
TITLE	OUT LINE		
REF. NO	RATIO 1/5~1/100		
DWG NO	F0380100T007A03		