THREE PHASE INDUCTION MOTOR

TEFC

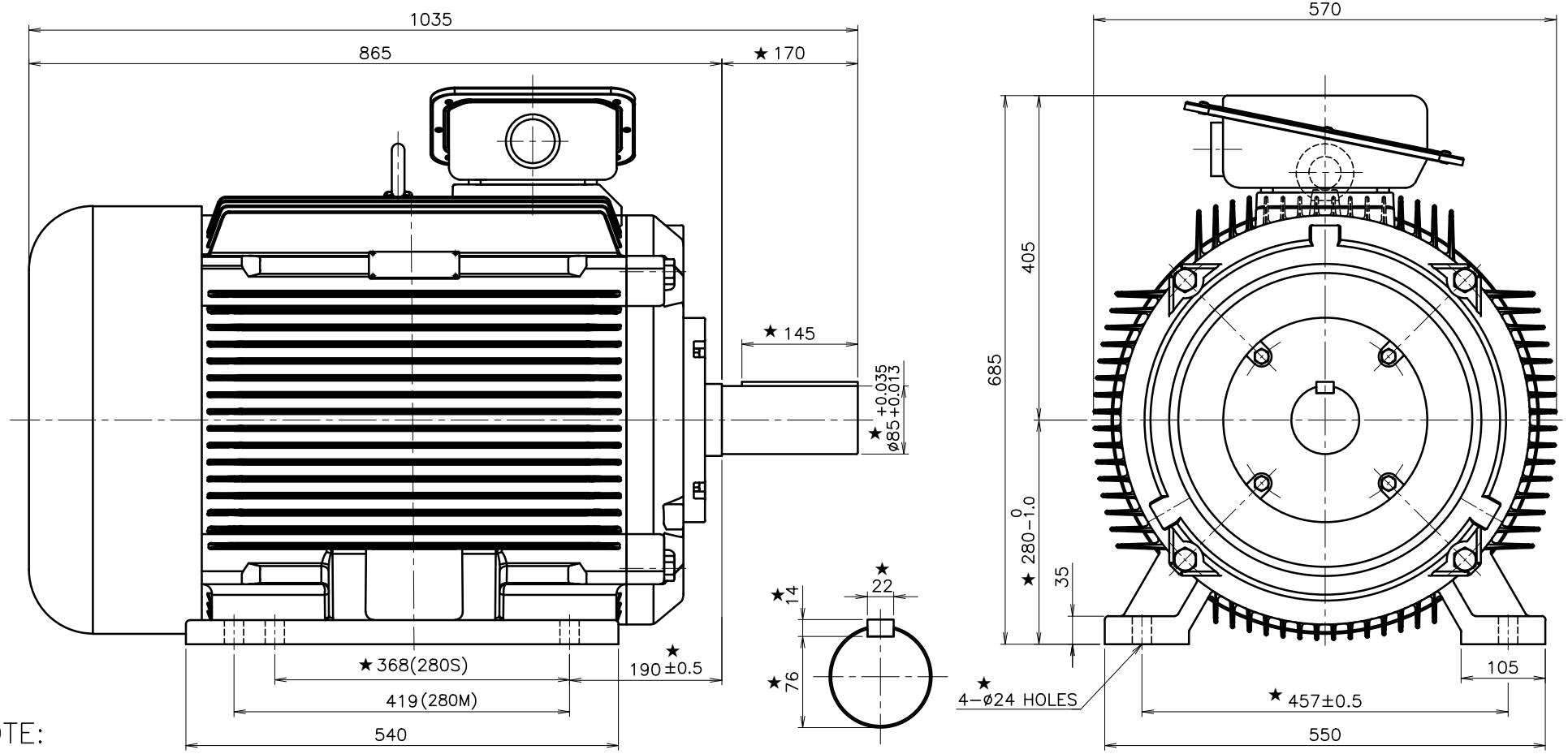

NOTE:

1) 키 및 키홈 공차: KS B 1311
2) ★ 표 이외의 치수는 APPROX 치수임.
3) Use 280M FRAME to process holes for 280S FRAME.

FRAME NO.	OUTPUT (kW)	POLES	VOLTS	Hz	INS. CLASS	PRO-TEC-TION	RA-TING	BEARING NO. 2P DRIVE	2P OPP.D.	4P DRIVE	4P OPP.D.	6P/8P DRIVE	6P/8P OPP.D.	APPROX WEIGHT(kg) 2P	4P	6P/8P
280S	110	4	380V	60	F	IP55	CONT	–	–	6319 zz	6317 zz	6319 zz	6317 zz	–	–	–
	90	6														
	55	8														

APPD BY	IL HWAN KIM	UNIT	mm
CHKD BY	IL HWAN KIM	SCALE	N/S
DSND BY	LEE EUN HWA	PROJEC'N	3rd Angle
DATE	2020.04.06	PAGE	

SHINMYUNG ELECTRIC CO.,LTD

SUBJECT | Revision No. 0

TITLE: OUT LINE

REF. NO: HORIZONTAL TYPE

DWG NO: TFC2800403B03N