TYPE	EP+ (Efficiency & Power Plus)													Approx Weight (kg)
GEAR RATIO	1/5	1/10	1/15	1/20	1/30	1/40	1/50	1/60	1/75	1/80	1/90	1/100	1/150	
RPM	360	180	120	90	60	45	36	30	24	22.5	20	18	12	–

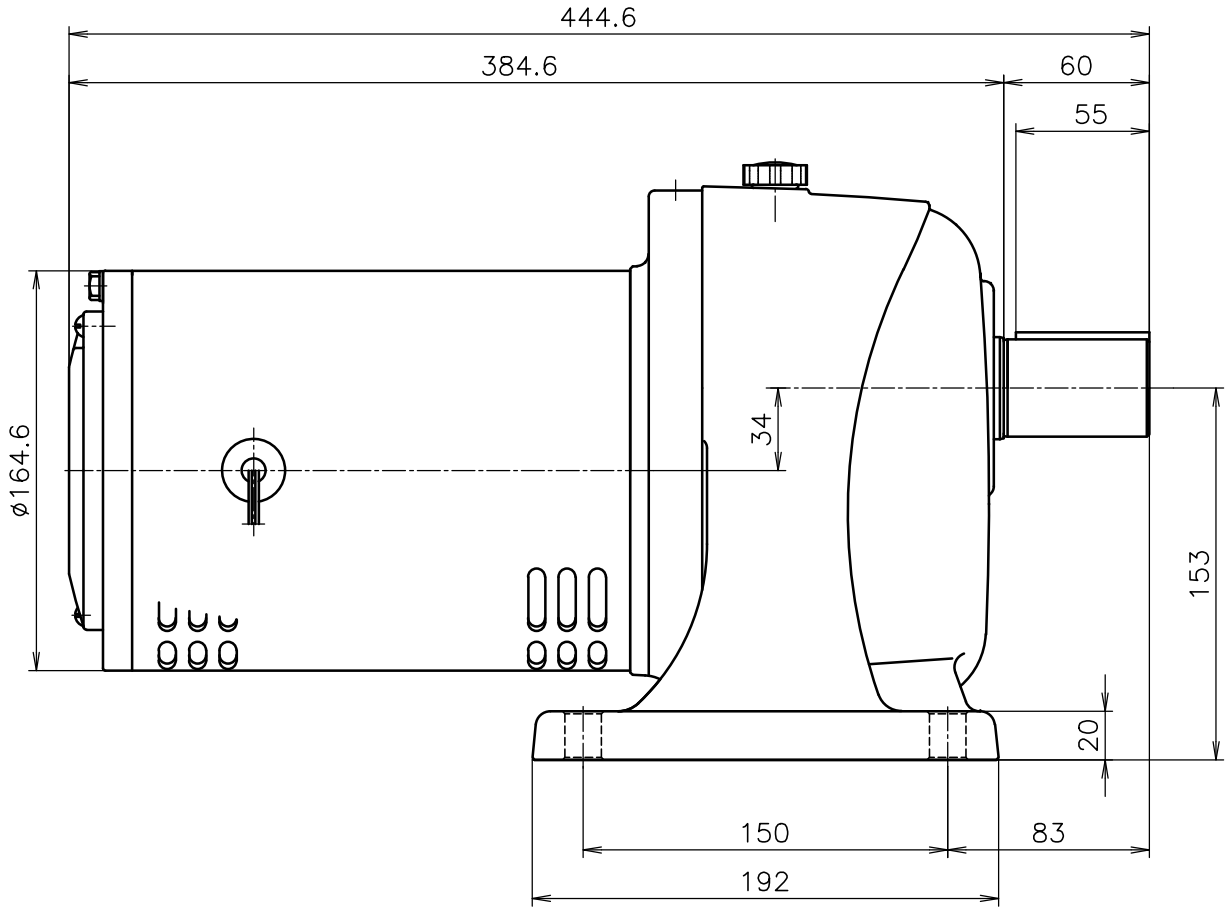

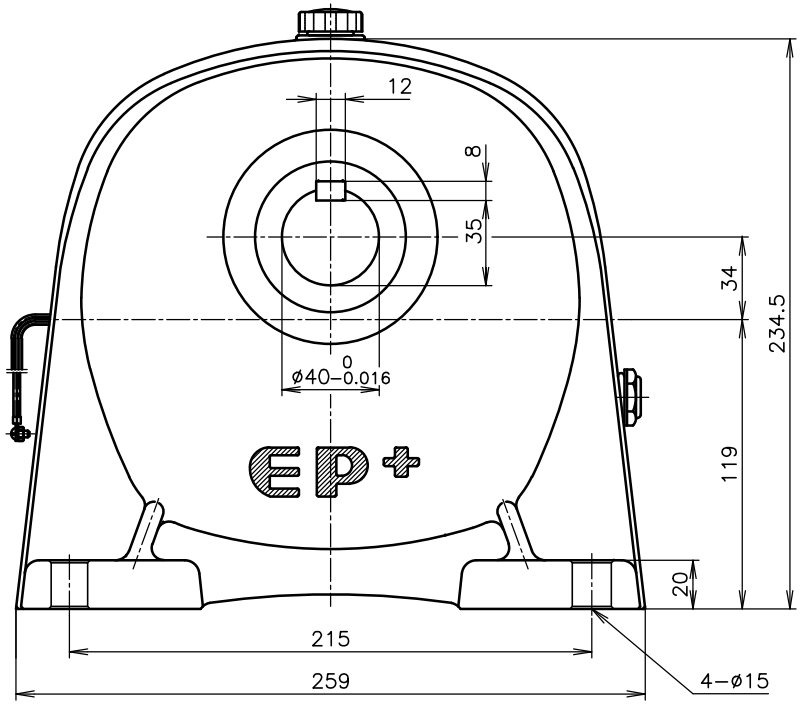

SINGLE PHASE INDUCTION MOTOR SPEC

감속기 형번 (출력축)	PH	P	kW	VOLTS	Hz	BEARING NO.	기동방식	절연종류	PRO-TEC-TION	RA-TING
38(40)	1	4	0.75	220	60	6306/6203	콘덴서기동 운전형	B 종	IP22	CONT.

APPD BY	CS LEE	UNIT	mm	SUBJECT	EP+	Revision No. 0
CHKD BY	CS LEE	SCALE	N/S	TITLE	OUT LINE	
DSND BY	EH LEE	PROJEC'N	3rd Angle			
DATE	2024.03.27	PAGE				
SMC SHINMYUNG ELECTRIC CO.,LTD				REF. NO	1/150	
				DWG NO	S41038150075A01	