THREE PHASE INDUCTION MOTOR

TEFC

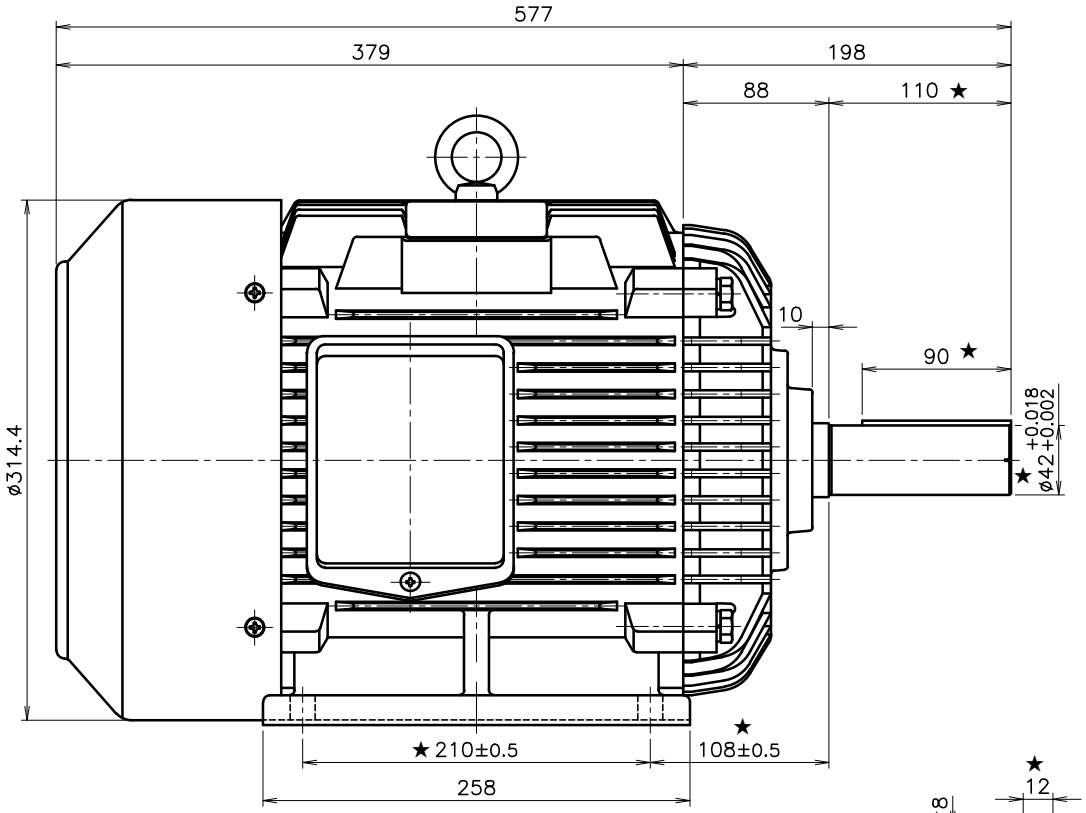

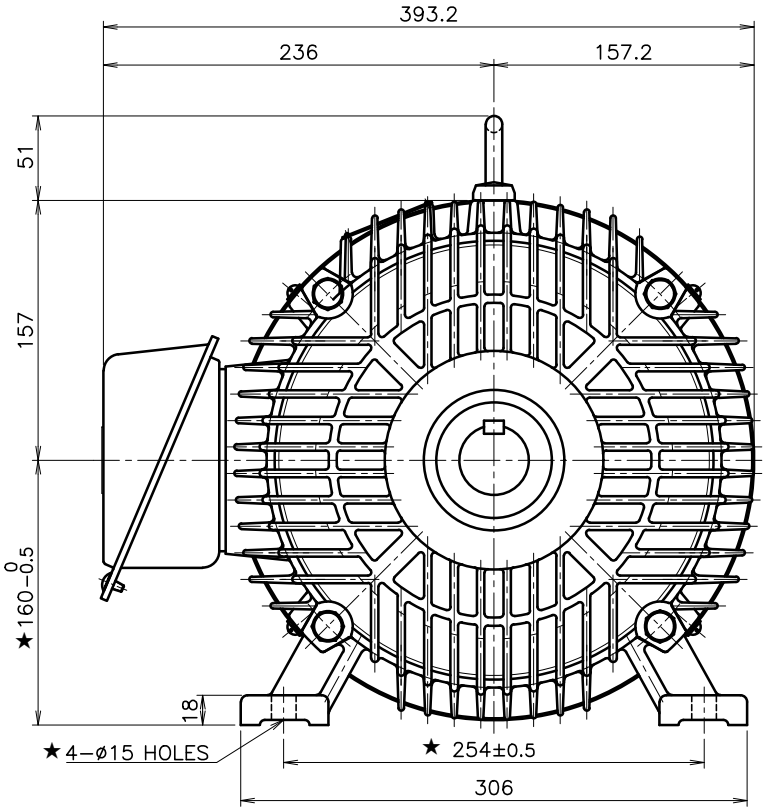

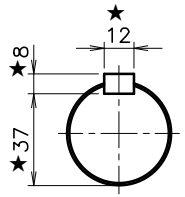

OUTPUT SHAFT

NOTE:

1) 키 및 키홈 공차: KS B 1311

2) ★ 표 이외의 치수는 APPROX 치수임.

FRAME NO.	OUTPUT(kW) 2P	4P	6P	8P	VOLTS	Hz	INS. CLASS	PRO-TEC-TION	RA-TING	BEARING NO. 2P DRIVE	2P OPP.D.	4P DRIVE	4P OPP.D.	6P DRIVE	6P OPP.D.	APPROX WEIGHT(kg) 2P	4P	6P/8P
160M	11 15	11	7.5	–	–	–	–	IP44	CONT	6309 zz	6208 zz	6309 zz	6208 zz	6309 zz	6208 zz	–	–	–

APPD BY		UNIT	mm
CHKD BY		SCALE	N/S
DSND BY	KEOAK HOON	PROJEC'N	3rd Angle
DATE	2015.05.18	PAGE	

SHINMYUNG ELECTRIC CO.,LTD

SUBJECT | Revision No. 0

TITLE: OUT LINE

REF. NO: HORIZONTAL TYPE

DWG NO: TFC1600403B03