TYPE	EP+ (Efficiency & Power Plus)													Approx Weight (kg)
GEAR RATIO	1/5	1/10	1/15	1/20	1/30	1/40	1/50	1/60	1/75	1/80	1/90	1/100	1/150	
RPM	360	180	120	90	60	45	36	30	24	22.5	20	18	12	–

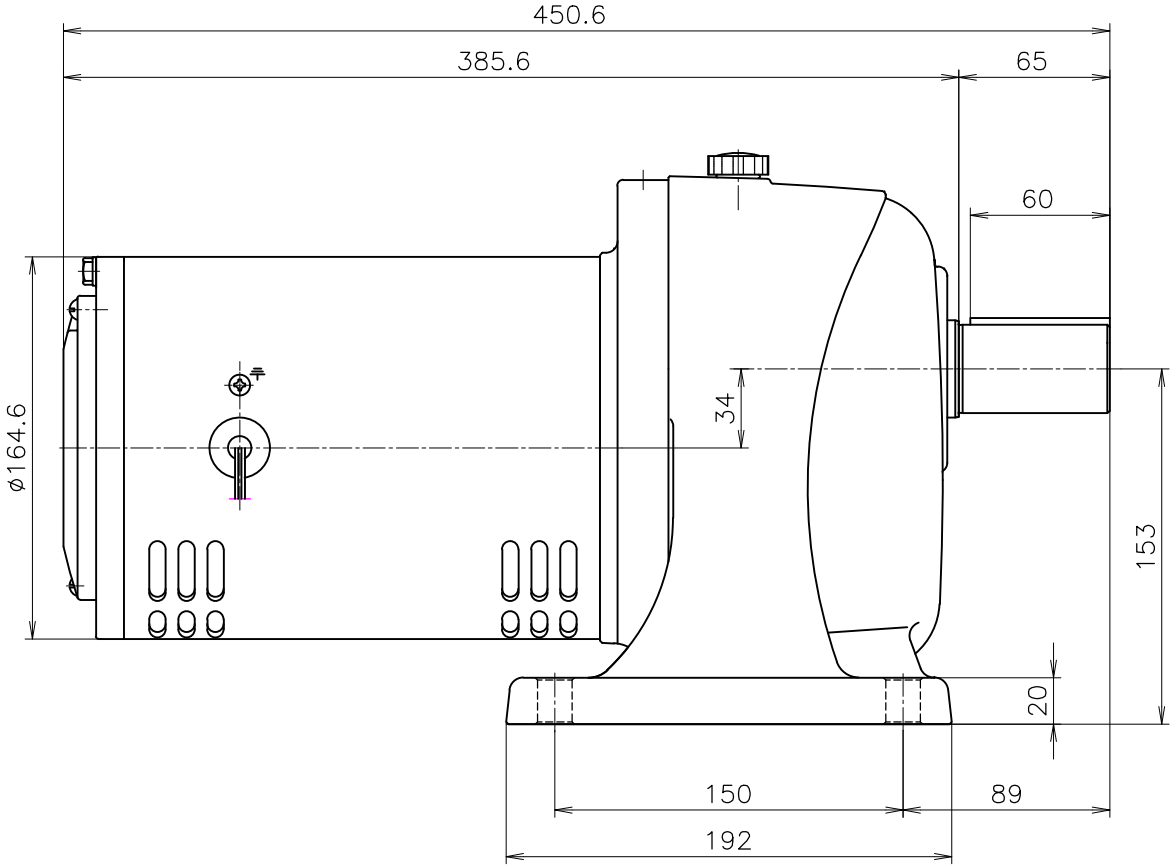

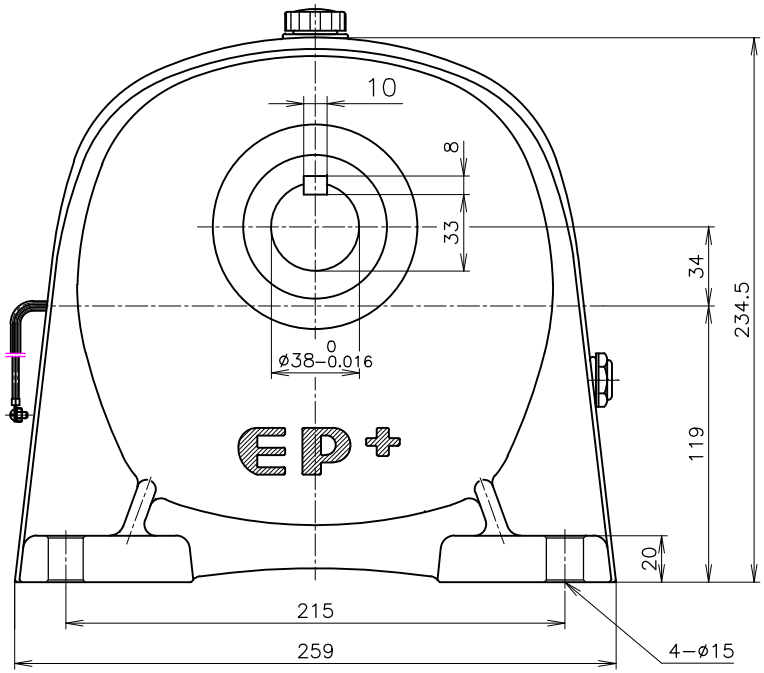

SINGLE PHASE INDUCTION MOTOR SPEC

감속기 형번 (출력축)	PH	P	kW	VOLTS	Hz	BEARING NO.	기동방식	절연종류	PRO-TEC-TION	RA-TING
38	1	4	0.75	220	60	6306/6203	콘덴서기동 운전형	B 종	IP22	CONT.

APPD BY	CS LEE	UNIT	mm
CHKD BY	CS LEE	SCALE	N/S
DSND BY	EH LEE	PROJEC'N	3rd Angle
DATE	2024.03.27	PAGE	

SHINMYUNG ELECTRIC CO.,LTD

SUBJECT	EP+	Revision No.	0
TITLE	OUT LINE		
REF. NO	1/5~1/150		
DWG NO	S41038150075A01		